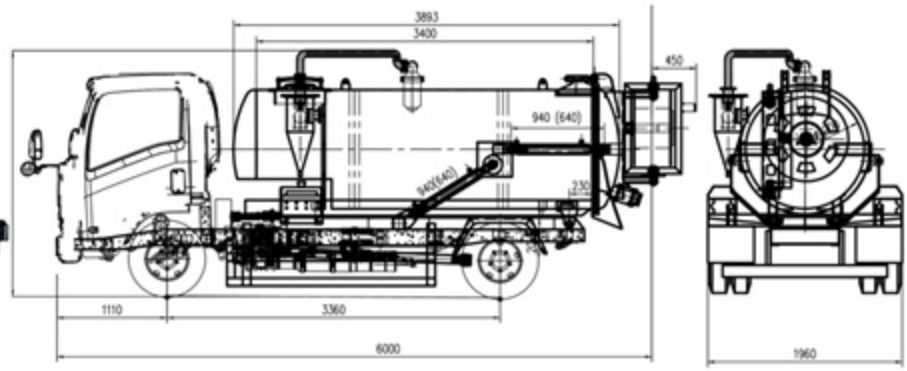

ISUZU NKR 2,500L+1,000L Combined Sewer Jetting Truck Operation Guidance

Sewage Tanker Operation Steps:

1. Pull the brake, start the truck engine, waiting until the air pressure enough over 5, then press the clutch pedal, PULL OUT the Left-Side PTO Button, slowly release the pedal, then the PTO is start to make vacuum pump working.

2. Keep the sewage tank rear cover closed, make sure the 2 sets clam well locked; keep the 2 sets discharge valve closed and second overflow valve closed, but make sure suction valve open.

POWERSTAR

3. 1) Pull out to start the Alarm Warning button, which make the alarm working, means when tanker reached to the position, it starts alarm to warning;
   2) Turn ON the electronic throttle switch, then can adjust the electronic throttle to make the vacuum pump rotation speed faster.

4. Connect the suction hose to the suction inlet valve; then put another head of the suction pipe into the sewage pool

5. Adjust the four-way valve to suction position (LEFT POSITION), carefully check the released air, the vacuum pump sound, the vacuum gauge meter.

www.isuzutruckscn.com
Whatsapp: 0086 136 7721 8585

6. Observe the sight glass on the side of the vacuum tank. When hear the alarm sound, immediately adjust the four-way valve to the middle position to stop the pump from working.

Note: 1) Only suggest use vacuum pump for Pump-In working, strictly forbidden for Pump-Out working;

2) Strictly prohibit over suction, otherwise it may cause damage to the pump.

7. Discharge all the waste water by gravity, also can connect with pipeline for discharge. (Recommend)

POWERSTAR TRUCKS
FOR YOUR SUCCESS

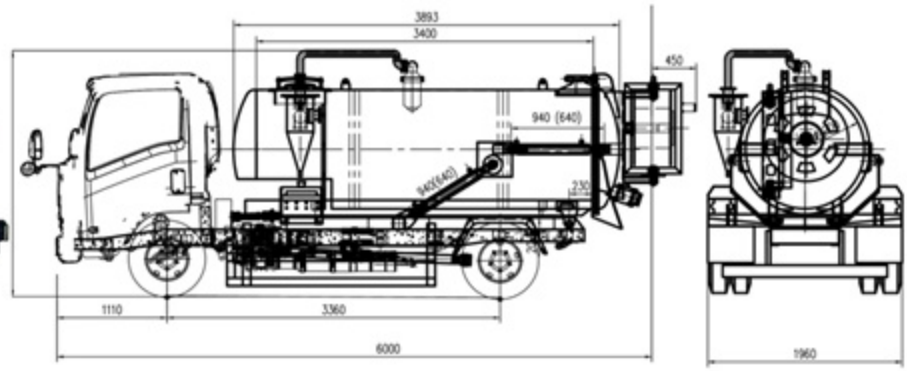

Tank lifting and rear cover opening operation guidance

1. Open the rear cover clamping device, loosen the handgrip and completely take off screw.
2. Adjust the rear cover manual operation joystick to open rear door, please be sure the inside and outside air pressure is equal before open the door. If the pressure is not equal, the door seal and oil cylinder may be damaged.
3. Adjust the tank lifting joystick to lift the tank.

Joystick 1 *Control Back Cover open and close*:

UP Position⇨ Back Cover close

DOWN Position⇨ Back Cover open

Joystick 2 *Control Tank Body lifting up and falling down*:

UP Position ⇨ Tank Body falling down

DOWN Position ⇨ Tank Body lifting up

POWERSTAR

Water Tanker Operation Steps:

1. Pull the brake, start the truck engine, waiting until the air pressure enough over 5, then press the clutch pedal, PULL OUT the Right-Side PTO Button, slowly release the pedal, then the PTO is start to make high pressure pump working.

2. 1) Pull out to start the Alarm Warning button, which make the alarm working, means when tanker reached to the position, it starts alarm to warning;
   2) Turn ON the electronic throttle switch, then can adjust the electronic throttle to make the vacuum pump rotation speed faster.

www.isuzutruckscn.com
Whatsapp: 0086 136 7721 3585

3. Adjust the below valves to make high pressure jetting system working.

Joystick 4	UP Position: Water not get into the high-pressure jetting pipeline DOWN Position: Water get into the high-pressure jetting pipeline
Joystick 5	UP Position: Hose Reel released for working DOWN Position: Hose Reel retract back after working
Joystick 6	UP Position: Hose Reel clockwise rotation DOWN Position: Hose Reel counterclockwise rotation

Optional to choose different type of high-pressure jetting head for usage

4. Observe the level gauge on the side of the water tank, stop the usage when water is empty.

24 hours technical support: 0086 155 7227 0555

POWERSTAR TRUCKS

FOR YOUR SUCCESS